1. Main structure (Rev. A)

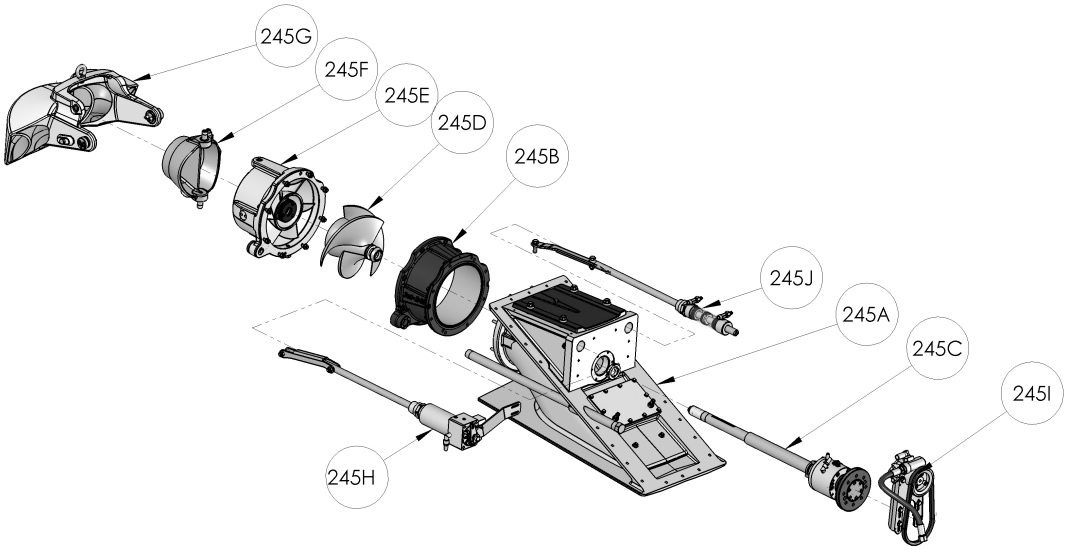

245A	Frame	245F	Steering nozzle
245B	Impeller cone	245G	Reversing deflector
245C	Bearing and main shaft	245H	Hydraulic cylinder
245D	Impeller	245I	Oil pump
245E	Stator	245J	Steering cylinder

The AJ 245 standard supply comes either with a rear bearing greasing hose or an automatic lubrication unit, depending on the type of order. The product codes are P9912 for the greasing hose and 10482 for the automatic lubrication unit.

2. 245A Frame (Rev. E)

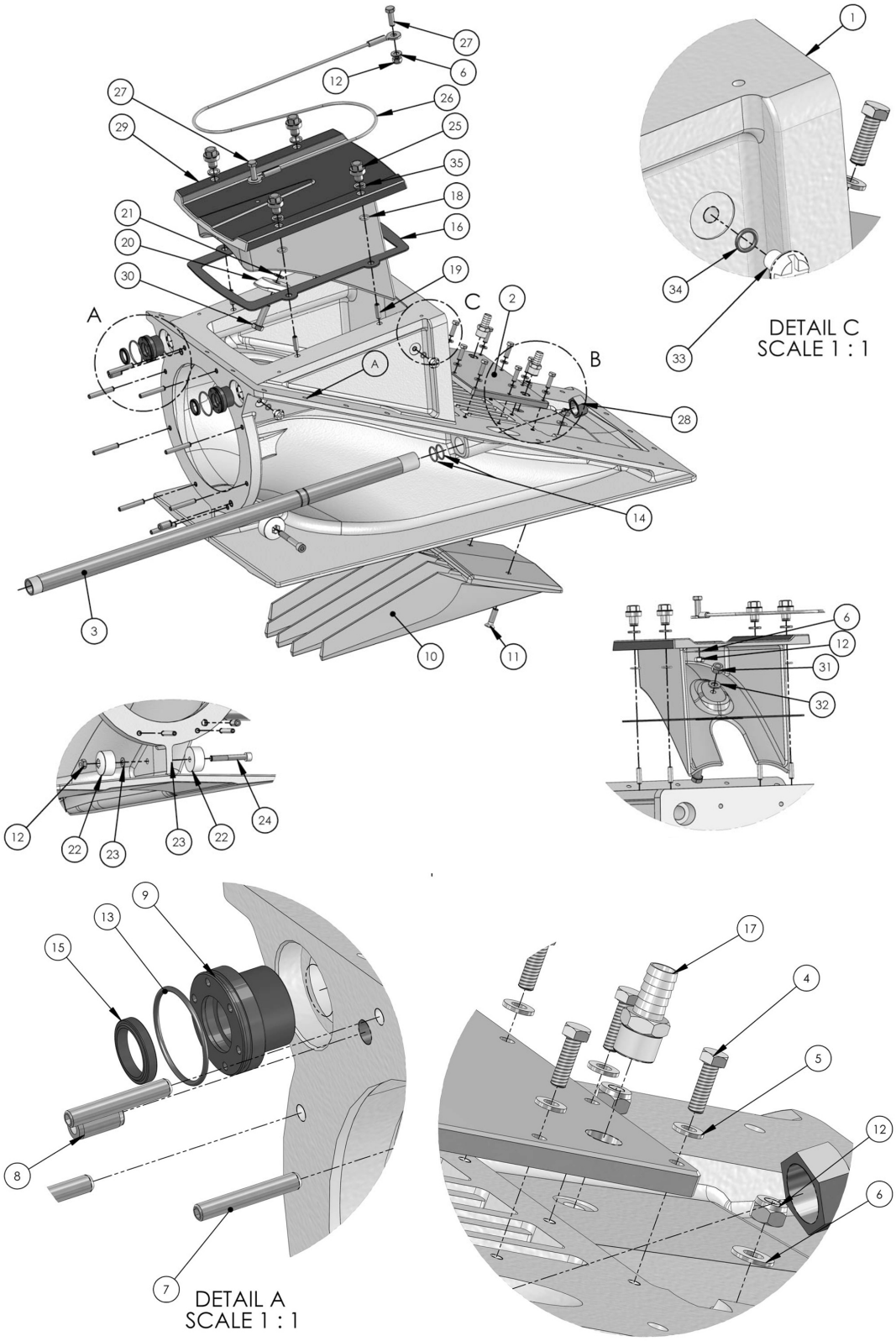

Pos.	Description	Code	Pcs
1	Frame	10599	1
2	Cooler cover	10979	1
3	Raw water pipe	10601	1
4	Hex screw M6	R04060202	10
5	Washer M6	R10060002	10
6	Washer M8	R10080002	4
7	Set screw M8	R05080452	8
8	Dowel pin	10762	2
9	Seal sleeve	10763	2
10	Intake screen	10769	1
11	Hex socket countersunk screw M8	R02080302	2
12	Locking nut M8	R31080002	5
13	O-ring	T0000032	2
14	O-ring	T0000022	2
15	Wiper	5773	2
16	Inspection hatch seal	10813	1
17	Hose fitting	P0314	2
18	Round wire retaining ring	10820	4
19	Set screw M8	R05080252	4
20	Anode	10053	1
21	SL washer M10	R12100002	1
22	Anode	10409	2
23	SL washer M8	R12080002	2
24	Hex socket screw	R01080602	1
25	Screw	10822	4
26	Wire	10916	1
27	Hex screw M8	R04080252	2
28	Plug with seal	P0377	1
29	Inspection hatch cover 245	10981	1
30	Hex screw M10	R04100352	1
31	Locking nut M10	R31100002	1
32	Washer M10	R10100002	1
33	Plastic plug M8	11038	4
34	O-ring	T0000008	4
35	X-ring	T0000009	4

The product code for the frame seal sleeve kit is P9909.

3. 245B Impeller cone (Rev. B)

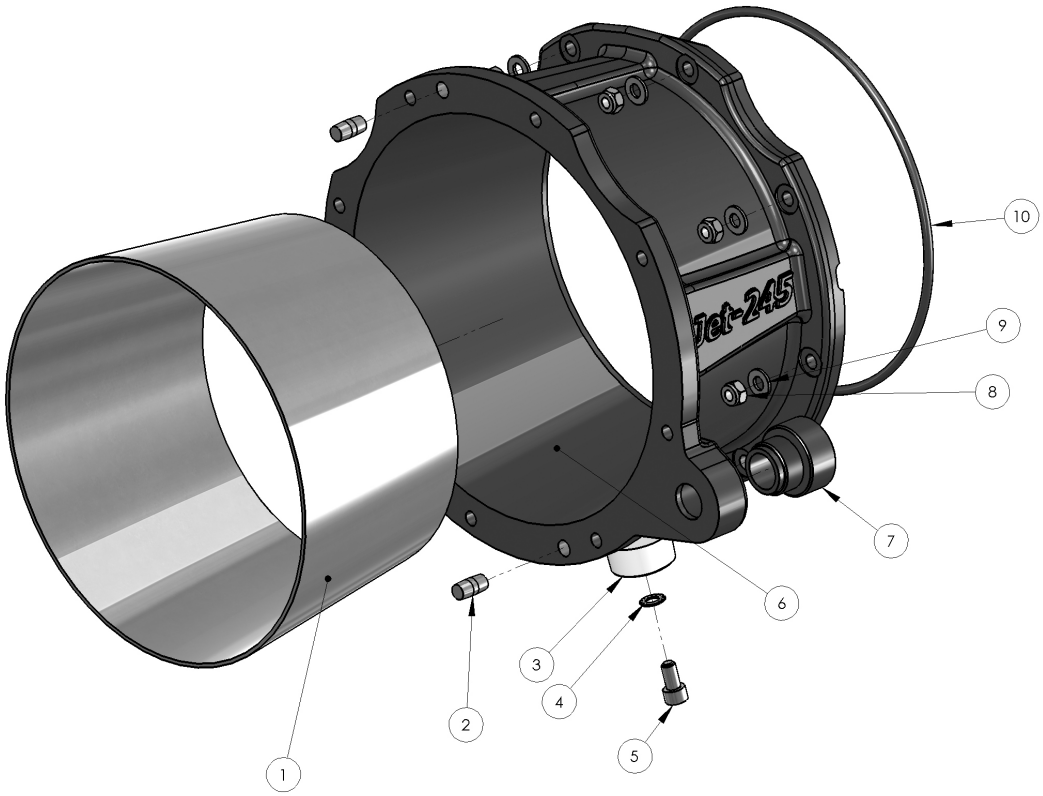

Pos.	Description	Code	Pcs
1	Cone	10713	1
2	Dowel pin	10762	2
3	Anode	10409	1
4	SL washer M8	R12080002	1
5	Hex socket screw M8	R01080252	1
6	Impeller cone	10710	1
7	Raw water connector	10761	1
8	Locking nut M8	R31080002	8
9	Washer M8	R10080002	8
10	O-ring	T0000225	1

4. 245C Bearing and main shaft

4.1. 245C4 Grease-lubricated rear bearing (Rev. A)

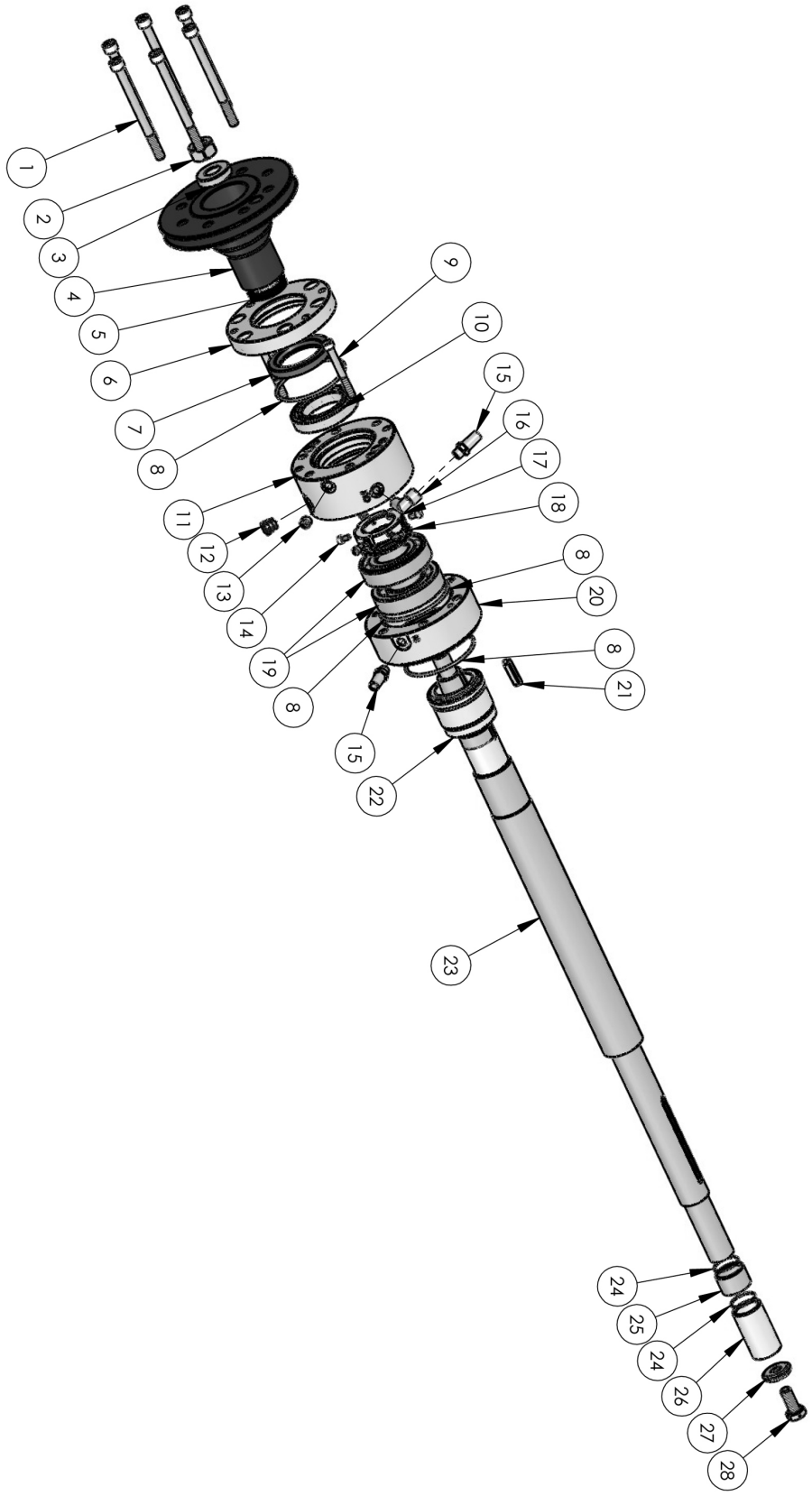

Pos.	Description	Code	Pcs
1	Hex socket screw M8	R01081102	6
2	Nut M16	R30160002	1
3	Spacer	10598	1
4	Drive flange	11348	1
5	Shaft seal	T9900030	1
6	Seal cover	11282	1
7	Shaft seal	T456508AS-FPM	1
8	O-ring	T0000073	3
9	Hex socket screw M6	R01060602	2
10	Deep groove ball bearing	L0101	1
11	Bearing housing cover	11281	1
12	Plug	P0375	1
13	Plug	R50180002	1
14	Hex socket screw M4	R01040082	6
15	Hose fitting	P0602	2
16	Angle fitting	P0502	1
17	Shaft nut	10817	1
18	Lock washer	L0307	1
19	Angular ball bearing	L0124	2
20	Bearing housing	11280	1
21	Key	K0201	1
22	Mechanical seal	T4001000	1
23	Shaft	11349	1
24	O-ring	T0000025	2
25	Shaft sleeve	10772	1
26	Shaft sleeve	10773	1
27	Locking plate	10056	1
28	Hex screw M10	R04100252	1

4.2. 245C5 Water-lubricated rear bearing (Rev. A)

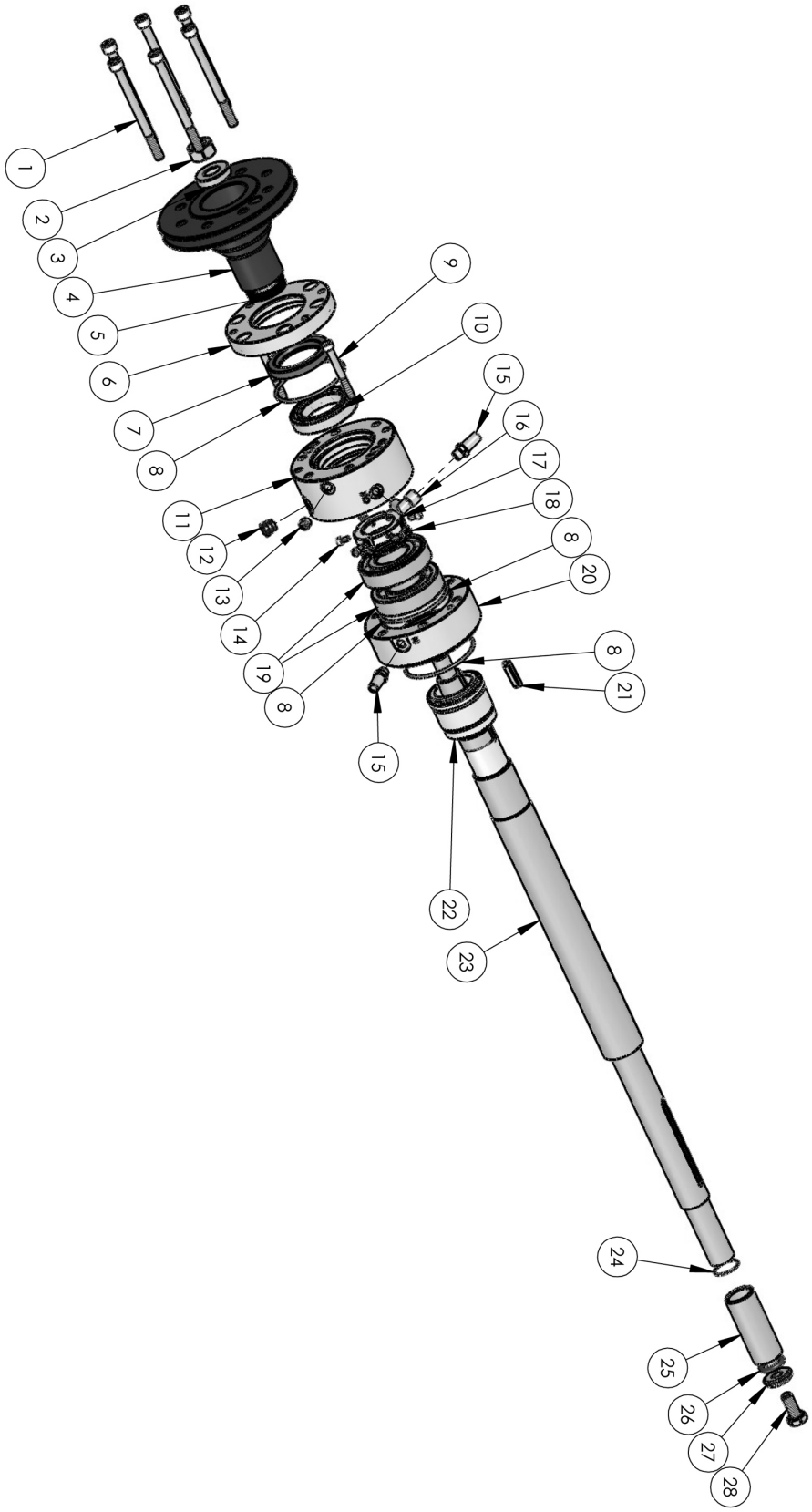

Pos.	Description	Code	Pcs
1	Hex socket screw M8	R01081102	6
2	Nut M16	R30160002	1
3	Spacer	10598	1
4	Drive flange	11348	1
5	Shaft seal	T9900030	1
6	Seal cover	11282	1
7	Shaft seal	T456508AS-FPM	1
8	O-ring	T0000073	3
9	Hex socket screw M6	R01060602	2
10	Deep groove ball bearing	L0101	1
11	Bearing housing cover	11281	1
12	Plug	P0375	1
13	Plug	R50180002	1
14	Hex socket screw M4	R01040082	6
15	Hose fitting	P0602	2
16	Angle fitting	P0502	1
17	Shaft nut	10817	1
18	Lock washer	L0307	1
19	Angular ball bearing	L0124	2
20	Bearing housing	11280	1
21	Key	K0201	1
22	Mechanical seal	T4001000	1
23	Shaft	11349	1
24	O-ring	T0000025	1
25	Shaft sleeve	11279	1
26	O-ring	T0180004501	1
27	Locking plate	10056	1
28	Hex screw M10	R04100252	1

4.3. 10610 Oil reservoir (Rev. C)

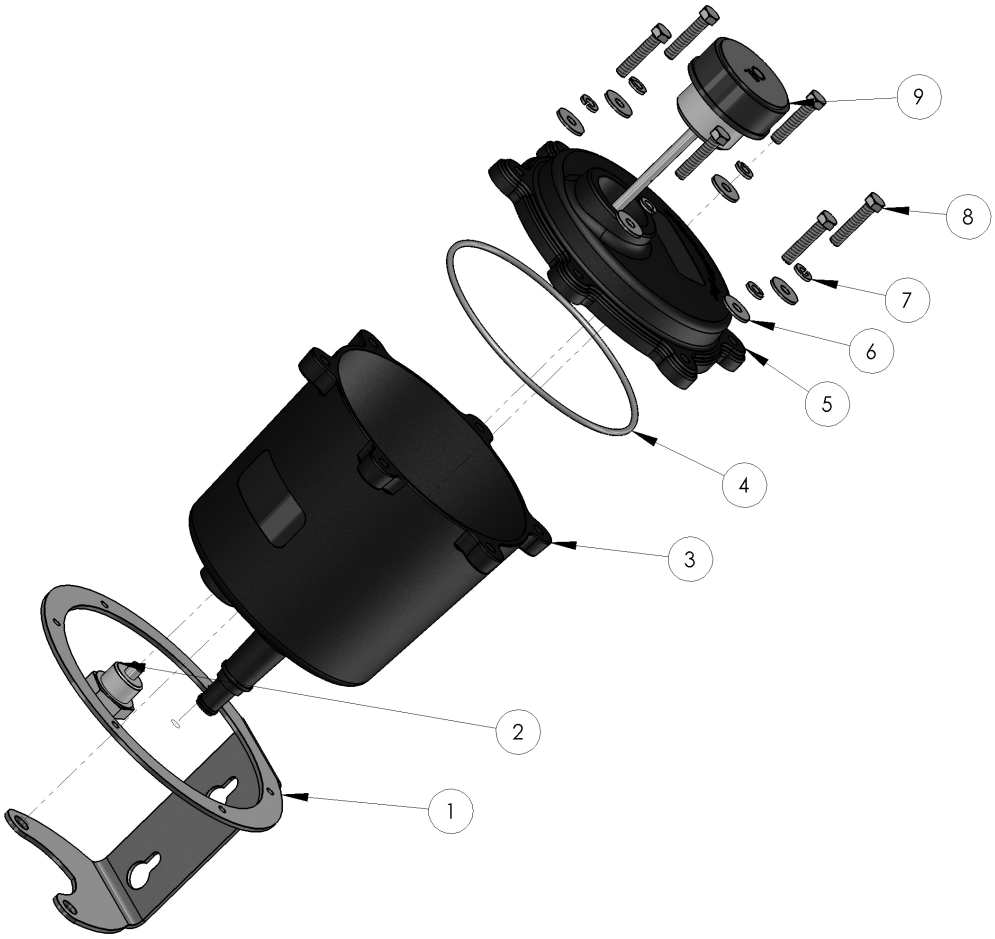

Pos.	Description	Code	Pcs
1	Oil reservoir bracket	10543	1
2	Plug with magnet	P0346	1
3	Oil reservoir	10535	1
4	O-ring	T0000124	1
5	Oil reservoir cover	10536	1
6	LOD washer M5	R11050002	6
7	Spring washer M5	R13050002	6
8	Hex screw M5	R04050252	6
9	Cap	P0345	1

5. 245D Impeller (Rev. B)

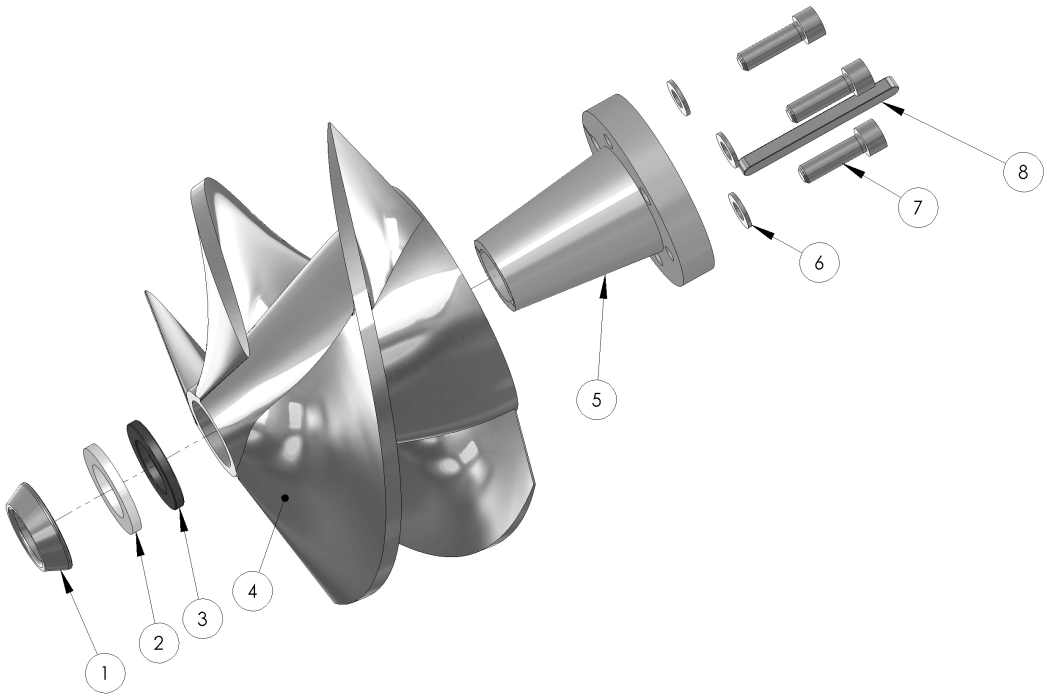

Pos.	Description	Code	Pcs
1	Adjustment sleeve	11156	1
2	Shim ring	**	**
3	Isolation ring	10786	1
4	Impeller	*	1
5	Impeller mounting cone	10102	1
6	Washer M10	R10100002	3
7	Hex socket screw M10	R01100352	3
8	Key	K0204	1

*Product code is dependent on impeller type

**Product code and quantity are dependent on impeller type and impeller tip clearance

5.1. Impeller, choker and steering nozzle combinations

Impeller code	Type	Choker code	Steering nozzle code
10951	#8-3	10791	10759D127
10959	#9-3	10795	10759D135
11059-A	#9-3 -8%	10795	10759D135
11059-B	#9-3 -15%	10795	10759D135
11059-C	#9-3 -20%	10795	10759D135
11059-D	#9-3 -25%	10795	10759D135
10787	#10-3	10795	10759D135

Impeller code	Type	Choker code	Steering nozzle code
10787-A	#10-3 -8%	10795	10759D135
10831	#11-3	10795	10759D135
10831-A	#11-3 -8%	10795	10759D135
10831-B	#11-3 -10%	10795	10759D135
10831-C	#11-3 -23%	10795	10759D135
10831-D	#11-3 -15%	10795	10759D135
10832	#14-3	10795	10759D135
10832-C	#14-3 -8%	10795	10759D135
10832-D	#14-3 -15%	10795	10759D135

5.2. Shim rings for impeller adjusting

Description	Code
Shim ring 0.5 mm	11157
Shim ring 1 mm	11158
Shim ring 3 mm	11159
Shim ring 5 mm	11160
Shim ring 10 mm	11007

6. 245E Stator

6.1. 245E Grease-lubricated rear bearing (Rev. B)

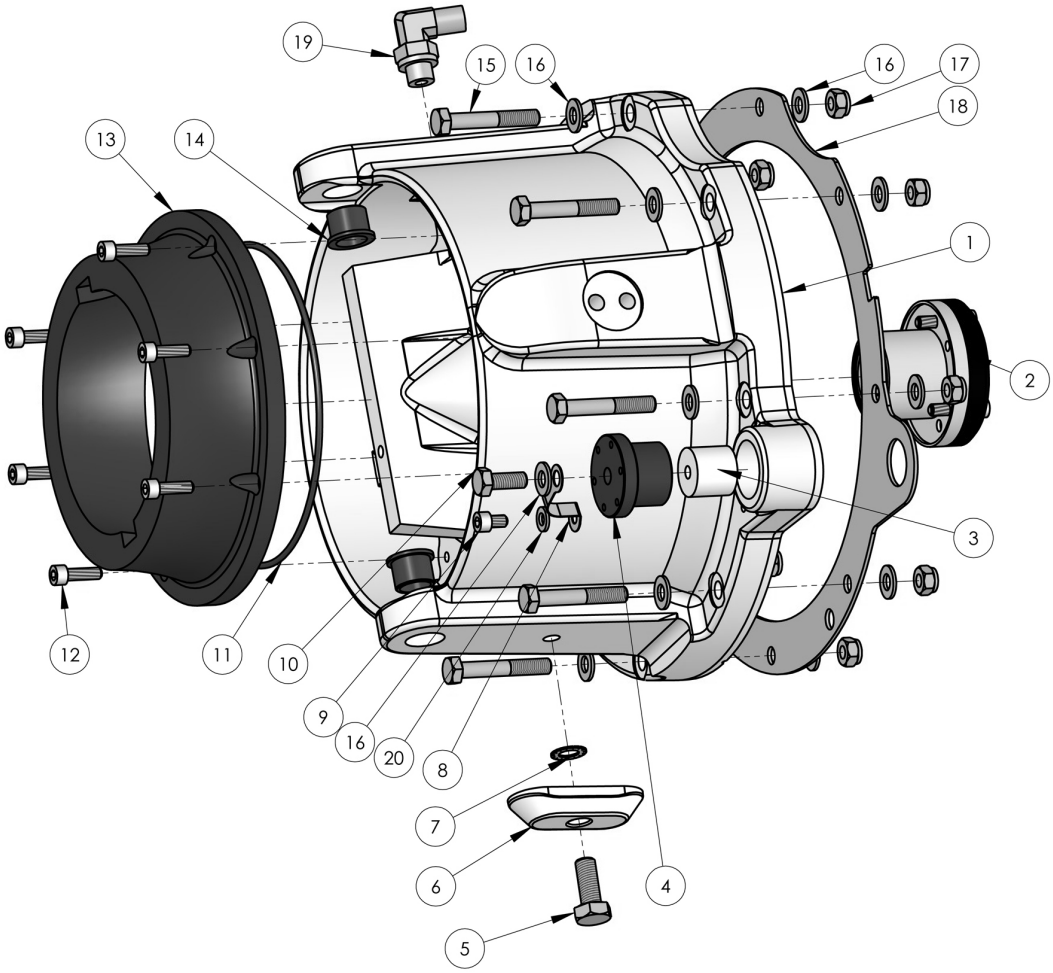

Pos.	Description	Code	Pcs
1	Stator 245	10734	1
2	Rear bearing housing	10777	1
3	Anode	10854	1
4	Anode plug	10764	1
5	Hex screw M10	R04100252	1
6	Anode	10053	1
7	SL washer M10	R12100002	1
8	Lead	10470	1
9	Hex socket screw M6	R01060102	1
10	Hex screw M8	R04080202	1
11	O-ring	T0000159	1
12	Hex socket screw M6	R01060202	6
13	Choker	*	1
14	Compound bearing	H0401	2
15	Hex screw M8	R04080502	8

Pos.	Description	Code	Pcs
16	Washer M8	R10080002	17
17	Locking nut M8	R31080002	8
18	Stator seal	10789	1
19	Directional fitting	P0387	1
20	Washer M6	R10060002	1

*Product code is dependent on choker size and impeller type

6.1.1. 10777 Rear bearing housing (Rev. A)

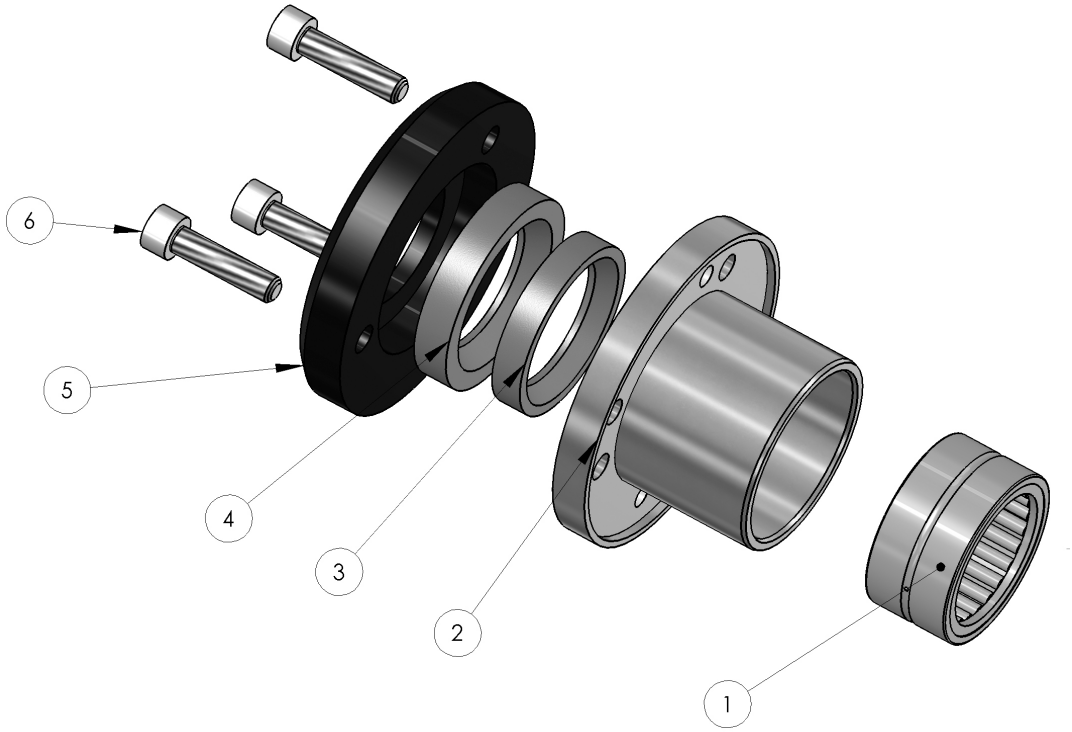

Pos.	Description	Code	Pcs
1	Needle roller bearing	L0141	1
2	Rear bearing housing	10776	1
3	Shaft seal	T9900030	1
4	Shaft seal	T9900032AS-P	1
5	Back bearing housing cover	10775	1
6	Hex socket screw M6	R01060252	3

6.1.2. Grease hose

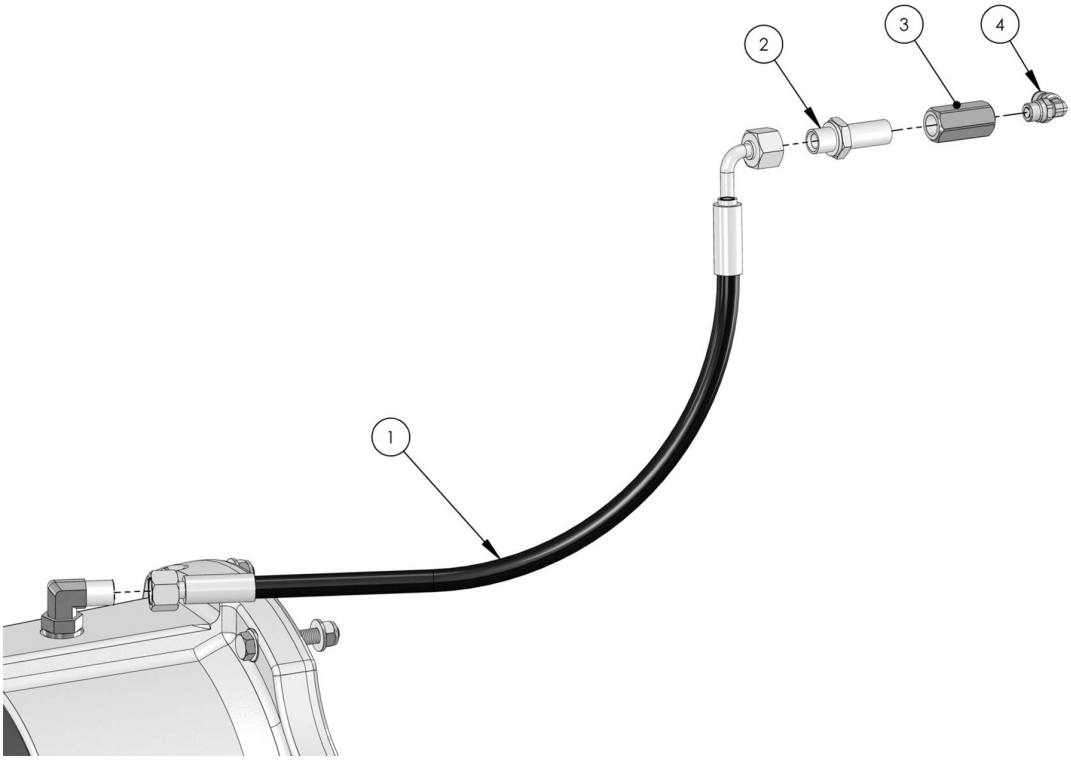

Pos.	Description	Code	Pcs
1	Grease hose	*	1
2	Lead-in connector	P0389	1
3	Reduction nipple	11380	1
4	Angle fitting	P0504	1
*	L=450 mm (short tail)	P0117	
	L=950 mm (long tail)	P0119	

6.2. 245E2 Water-lubricated rear bearing (Rev. A)

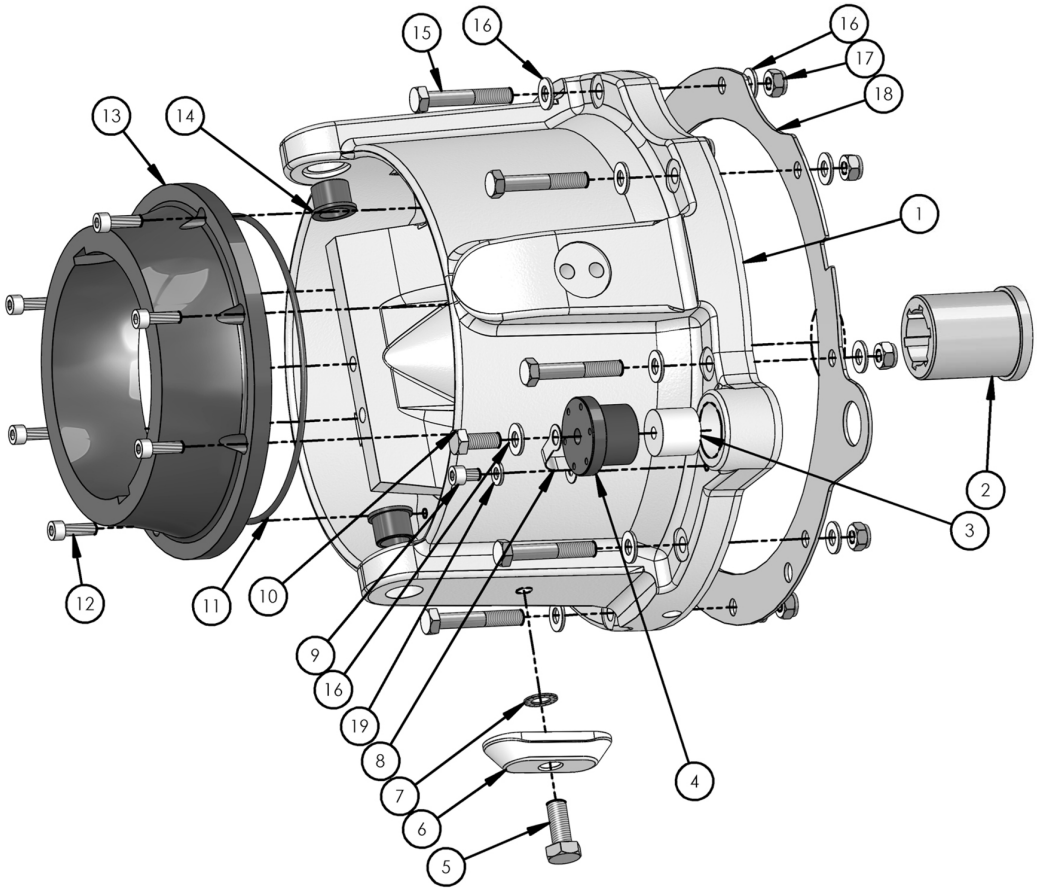

Pos.	Description	Code	Pcs
1	Stator 245	11278	1
2	Bearing	L0161	1
3	Anode	10854	1
4	Anode plug	10764	1
5	Hex screw M10	R04100252	1
6	Anode	10053	1
7	SL washer M10	R12100002	1
8	Lead	10470	1
9	Hex socket screw M6	R01060102	1
10	Hex screw M8	R04080202	1
11	O-ring	T0000159	1
12	Hex socket screw M6	R01060202	6
13	Choker	*	1
14	Compound bearing	H0401	2
15	Hex screw M8	R04080502	8
16	Washer M8	R10080002	17
17	Locking nut M8	R31080002	8
18	Stator seal	10789	1
19	Washer M6	R10060002	1

*Product code is dependent on choker size and impeller type

7. 245F Steering nozzle (Rev. A)

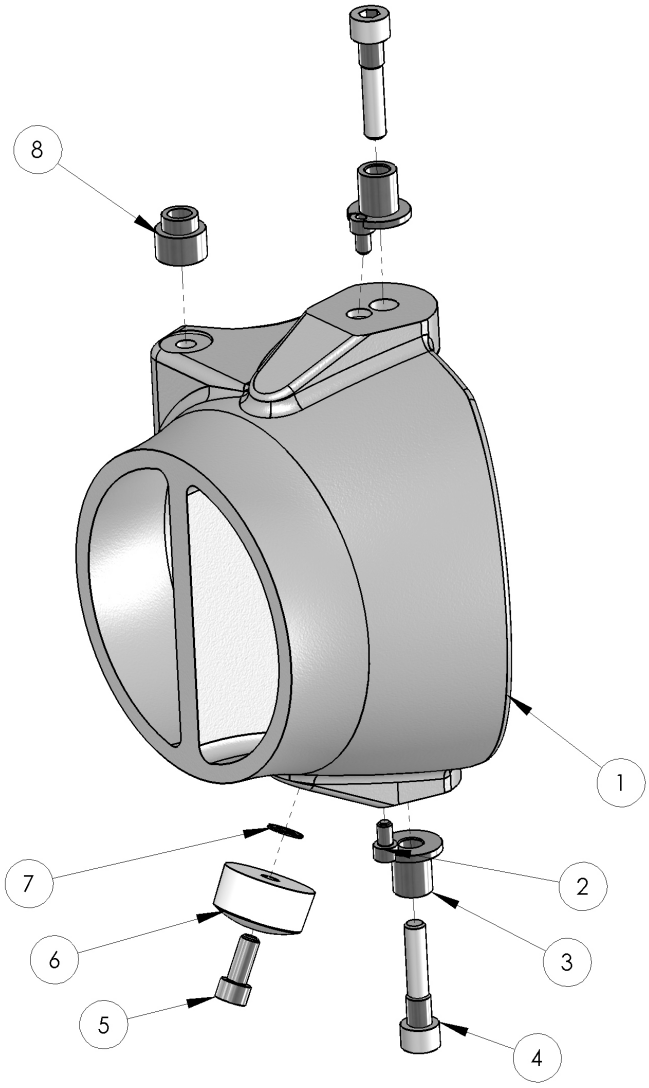

Pos.	Description	Code	Pcs
1	Steering nozzle	10759	1
2	Hex socket screw M6	R01060102	2
3	Joint pin	10616	2
4	Hex socket screw M10	R01100452	2
5	Hex socket screw M8	R01080252	1
6	Anode	10409	1
7	SL washer M8	R12080002	1
8	Joint pin	10825	1

8. 245G Reversing deflector (Rev. C)

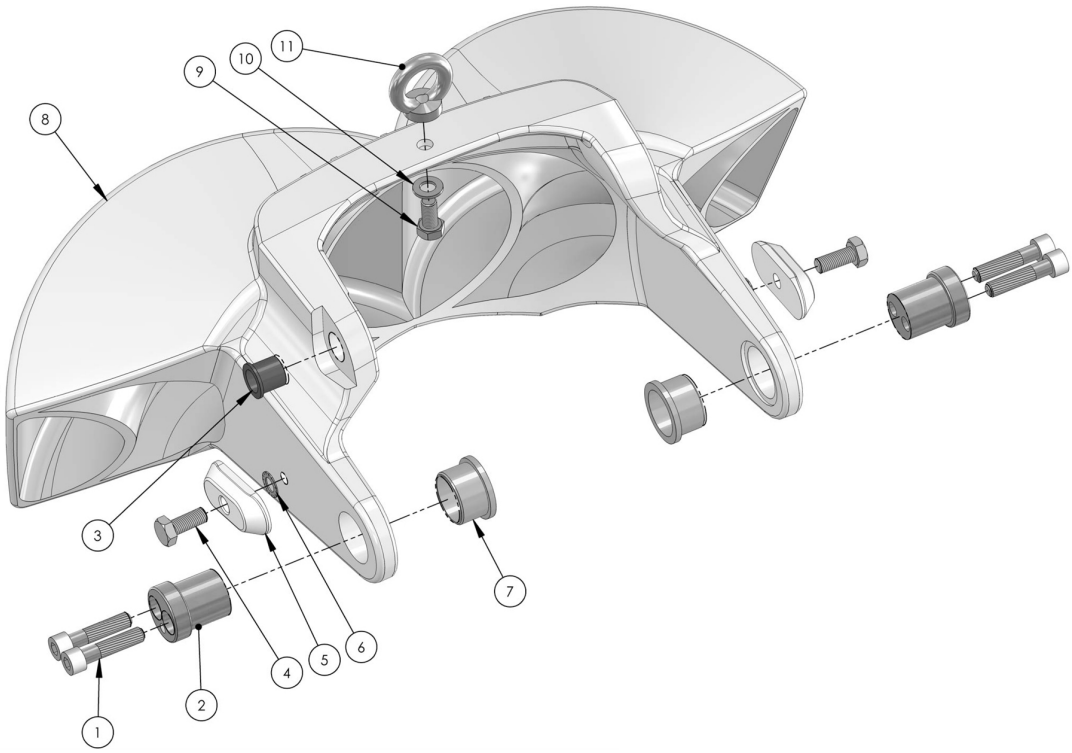

Pos.	Description	Code	Pcs
1	Hex socket screw M10	R01100452	4
2	Joint pin	10383	2
3	Bearing	11246	1
4	Hex screw M10	R04100252	2
5	Anode	10053	2
6	SL washer M10	R12100002	2
7	Plastic bearing	11329	2
8	Reversing deflector	10816	1
9	Hex screw M10	R04100202	1
10	Washer M10	R10100002	1
11	Lifting loop M10	R60100002	1

9. 245H Hydraulic cylinder

9.1. 245H Hydraulic cylinder (Rev. B)

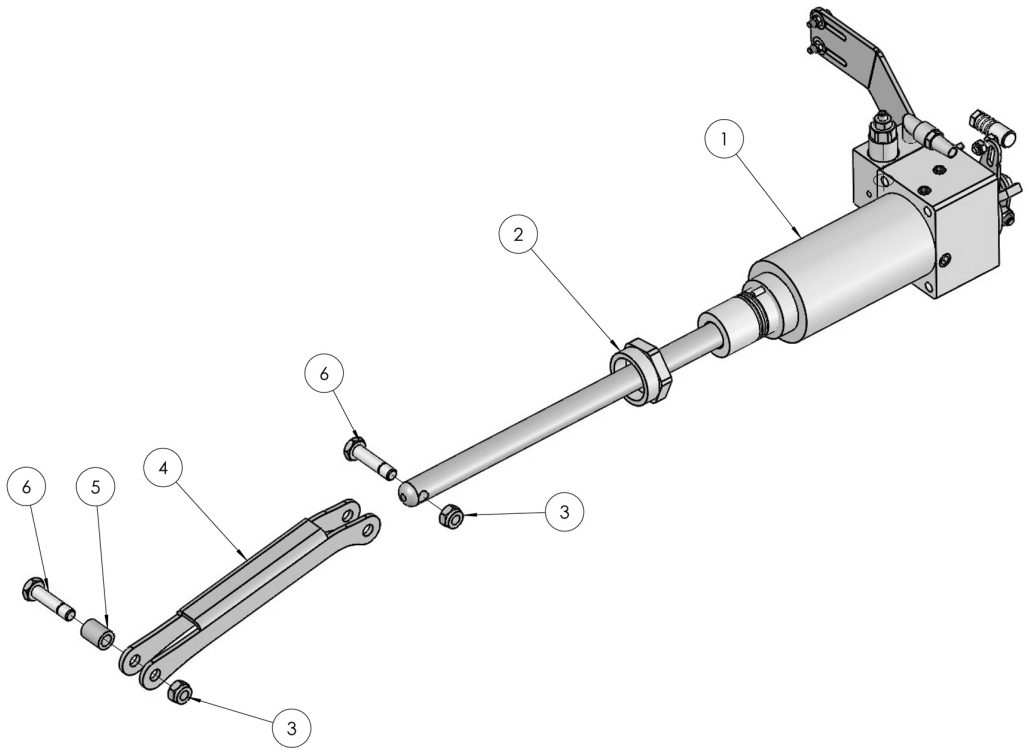

Pos.	Description	Code	Pcs
1	Hydraulic cylinder	10830	1
2	Nut	10812	1
3	Locking nut M10	R31100002	2
4	Intermediate bar	10818	1
5	Sleeve	10026	1
6	Joint screw	10436	2

9.1.1. 10830 Hydraulic cylinder (Rev. B)

10830 hydraulic cylinder is used in AJ 245 jets that have a standard control system with a rear bearing lubrication unit.

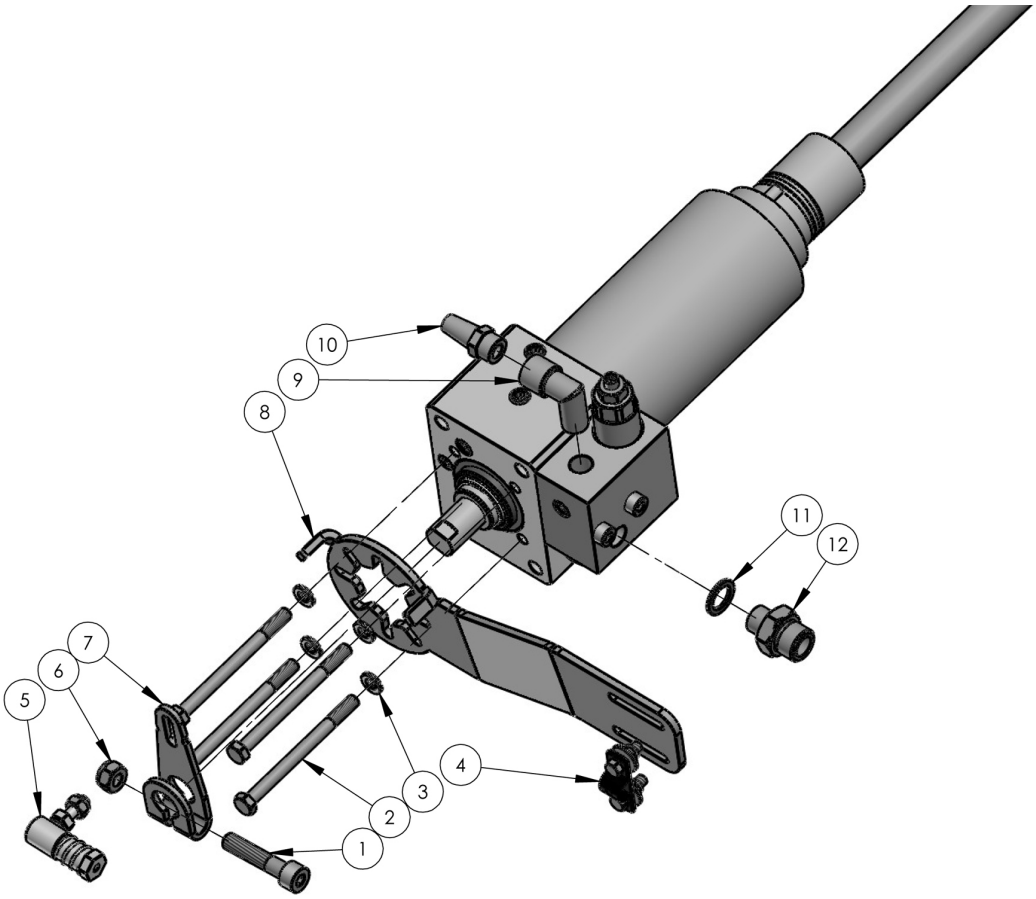

Pos.	Description	Code	Pcs
1	Hex socket screw M8	R01080402	1
2	Hex screw M6	R04060802	4
3	Spring washer	R13060002	4
4	Cable clamp	K0409	1
5	Angle joint	K0405	1
6	Locking nut M8	R31080002	1
7	Lever	10310	1
8	Cable bracket	10208	1
9	Angle fitting	P0302	1
10	Hose fitting	P0307	1
11	Copper seal	P0372	1
12	Reduction fitting	P0367	1

The product code for hydraulic cylinder sealing and bearing set is P9913. The set includes all the seals and bearings needed for cylinder maintenance.

9.2. 245H2 Hydraulic cylinder (Rev. Dev)

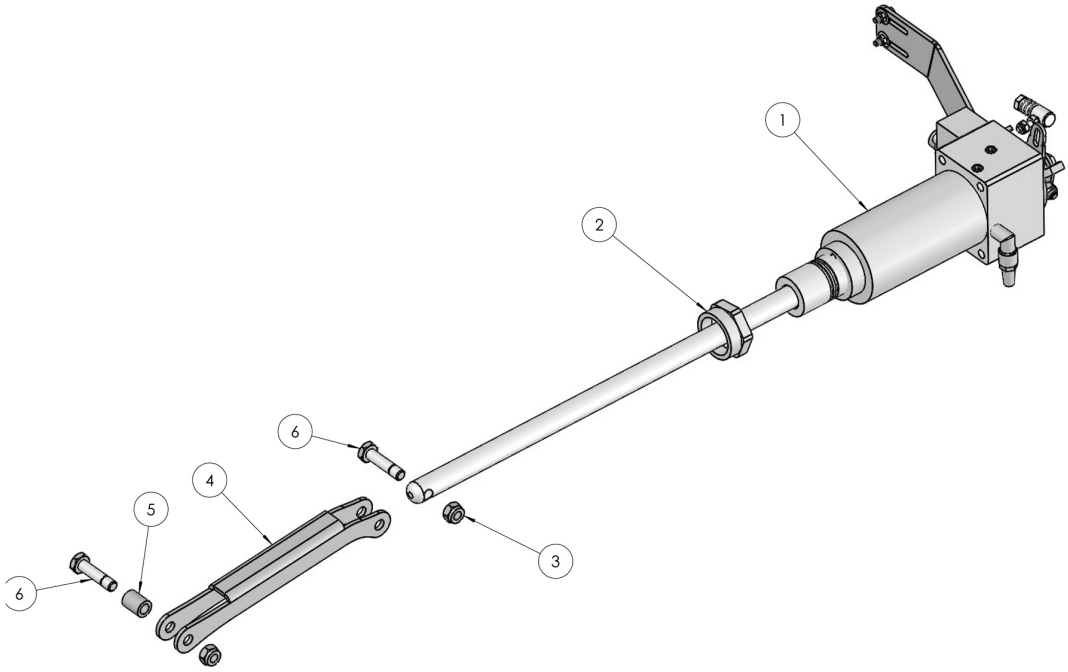

Pos.	Description	Code	Pcs
1	Hydraulic cylinder	10946	1
2	Nut	10812	1
3	Locking nut M10	R31100002	2
4	Intermediate bar	10818	1
5	Sleeve	10026	1
6	Joint screw	10436	2

9.2.1. 10946 Hydraulic cylinder (Rev. A)

10946 hydraulic cylinder is used in AJ 245 jets that have a standard control system without a rear bearing lubrication unit.

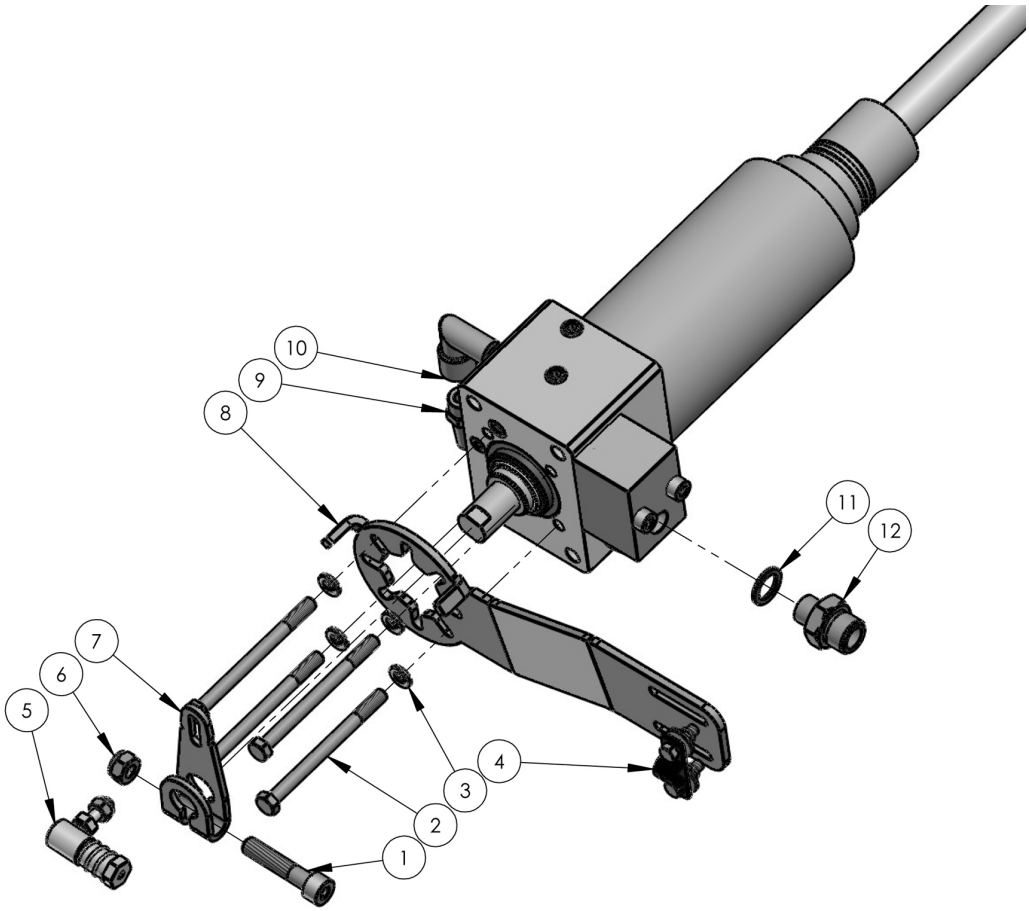

Pos.	Description	Code	Pcs
1	Hex socket screw M8	R01080402	1
2	Hex screw M6	R04060802	4
3	Spring washer	R13060002	4
4	Cable clamp	K0409	1
5	Angle joint	K0405	1
6	Locking nut M8	R31080002	1
7	Lever	10310	1
8	Cable bracket	10208	1
9	Hose fitting	P0307	1
10	Angle fitting	P0302	1
11	Copper seal	P0372	1
12	Reduction fitting	P0367	1

The product code for hydraulic cylinder sealing and bearing set is P9913. The set includes all the seals and bearings needed for cylinder maintenance.

10. 245I Hydraulic oil pump

10.1. 11078 Hydraulic oil pump (Rev. B)

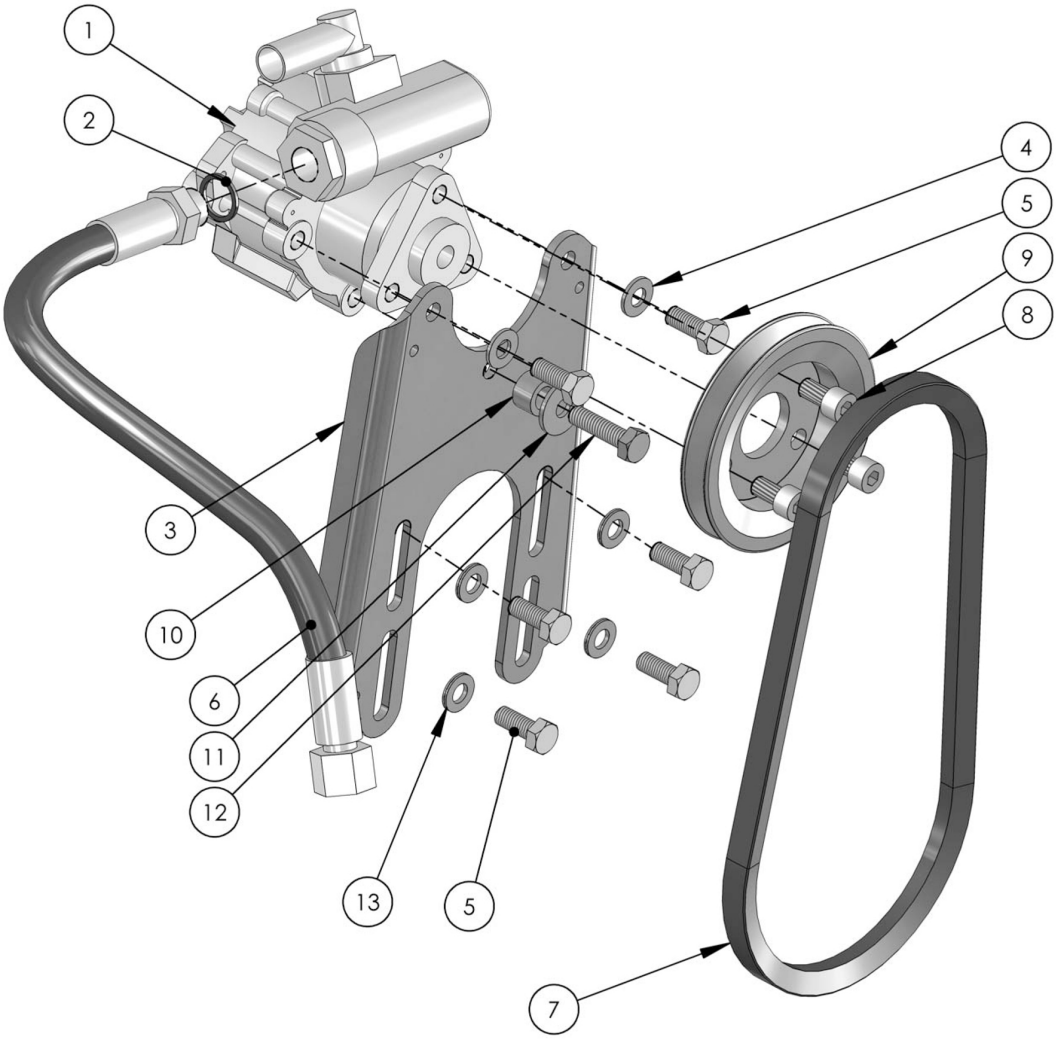

Pos.	Description	Code	Pcs
1	Hydraulic pump	5715	1
2	Copper seal	P0341	1
3	Oil pump bracket	10589	1
4	Washer M8	R10080002	2
5	Hex screw M8	R04080202	6
6	Pressure hose	P0115	1
7	V-belt	5717	1
8	Hex socket screw M8	R01080162	3
9	Belt pulley	10093	1
10	Sleeve	10025	1
11	LOD washer M8	R11080002	1
12	Hex screw M8	R04080302	1
13	WL washer M8	R16080002-SP	4

10.2. 10537 Oil reservoir (Rev. C)

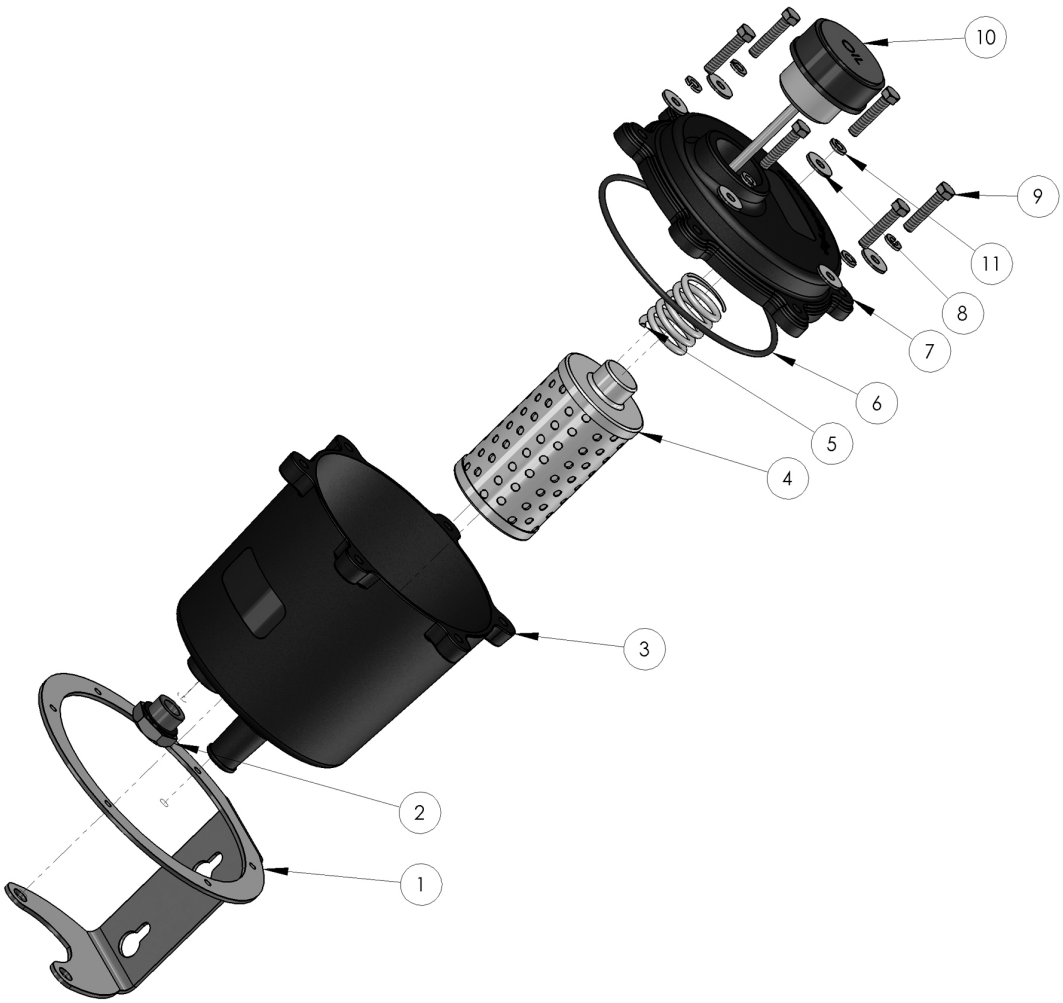

Pos.	Description	Code	Pcs
1	Oil reservoir bracket	10543	1
2	Oil plug	P0380	1
3	Oil reservoir	10535	1
4	Oil filter	10560	1
5	Spring	K0703	1
6	O-ring	T0000124	1
7	Oil reservoir cover	10536	1
8	LOD washer M5	R11050002	6
9	Hex screw M5	R04050252	6
10	Cap	P0345	1
11	Spring washer M5	R13050002	6

11. 245J Steering cylinder (Rev. A)

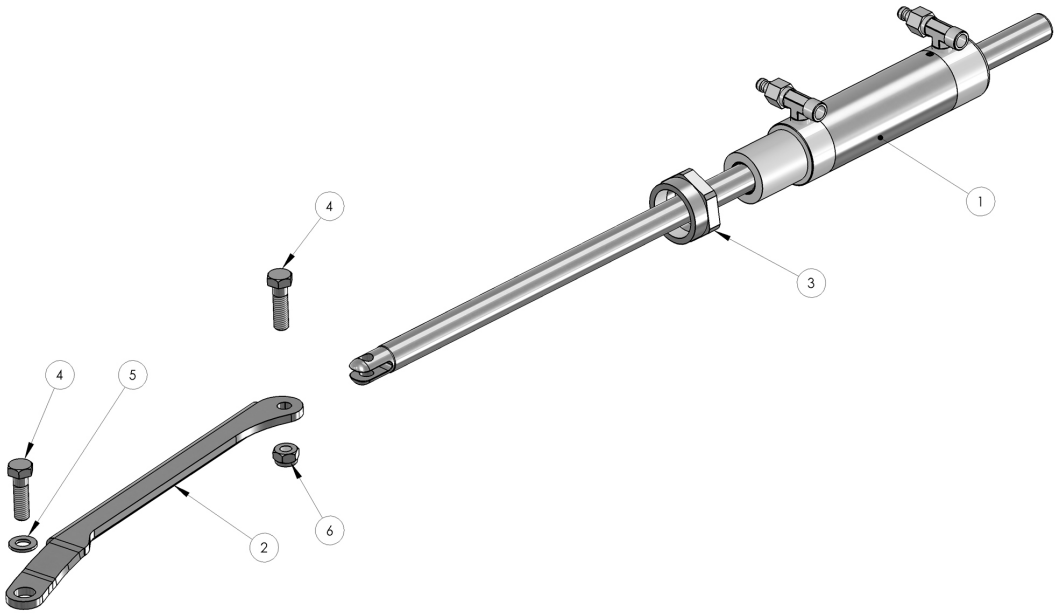

Pos.	Description	Code	Pcs
1	Hydraulic cylinder	10798	1
2	Intermediate bar	10823	1
3	Nut	10812	1
4	Hex screw M10	R04100352	2
5	Washer M10	R10100002	1
6	Locking nut M10	R31100002	1

The product code for 10798 hydraulic cylinder sealing and bearing set is P9908. The set includes all the seals and bearings needed for cylinder maintenance.

12. Installation inserts

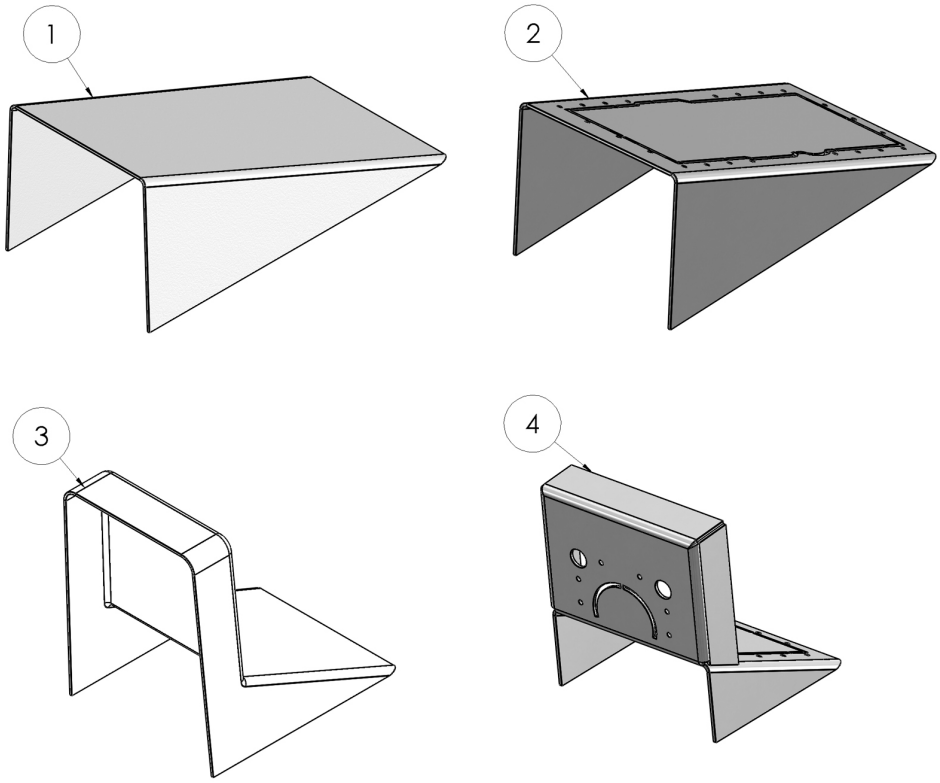

Pos.	Description	Code
1	Installation insert GRP, short tail	10835
2	Installation insert aluminium, short tail	10750
3	Installation insert GRP, long tail	10829
4	Installation insert aluminium, long tail	10749